# HDMI/CAT6 to single CAT6 extender
# - ID# 855

## Operation Manual

CONVERTERS.TV

## Introduction

The HDMI /CAT6 to Single CAT6 Extender is an advanced solution for HDMI and CAT6 signal distribution. The CAT6 output port can be easily connected to CAT6 to HDMI receivers to allow a stable connection between an HDMI source and any compatible HDMI display. Alternatively, it can be cascaded to extend the signal to several hundred meters.

## Features

- HDCP 1.1 and DVI 1.0 compliant.
- HDMI v1.3 with Deep Color video up to 12-bit, 1080p@24/60 Hz.
- Supports LPCM 7.1CH, Dolby TrueHD, Dolby Digital Plus and DTS-HD Master Audio transmission (32–192 kHz Fs sample rate).
- Supports a wide range of PC and HDTV resolutions from VGA to WUXGA and 480i to 1080p.
- Fully HDCP Compliant.
- EDID 8/12-bit setting switch.

## Applications

- Smart AV Installation for HDMI signal extension
- Household entertainment media sharing

## System Requirements

Input HDMI/DVI source equipment or HDMI to single CAT6 transmitter and output to single CAT6 to HDMI receiver.

CONVERTERS.TV

## Operation Controls and Functions

### Front Panel

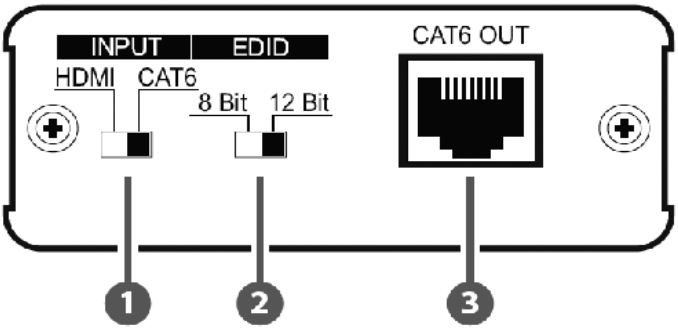


**1. HDMI/CAT6 Input Switch**
This switch allows users to select either HDMI or CAT6 as the input source.
**2. EDID 8/12-bit switch**
This switch allows users to change the output display's EDID between 8- or 12-bit resolution.
**3. CAT6 Out**
This port is to connect to a single CAT6 to HDMI receiver device attached to an output display.

### Rear Panel

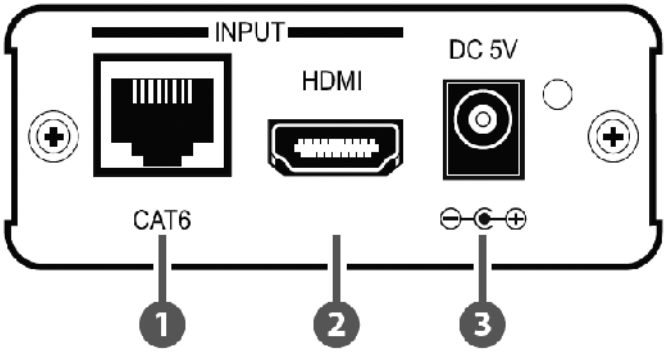


**1. CAT6 Input**
This port connects a single CAT6 transmitter device attached to a source device by HDMI.
**2. HDMI Input**
HDMI connector to connect a suitably equipped source device such as DVD/Blu-ray player.
**3. DC 5V**
This socket is where you plug the 5 V DC PSU into the unit, connect the PSU to an AC outlet.
**NOTE**
**A.**Unit tested with CAT6E/23AWG/Solid cable, using cables of another specification may result in a different operating distance.
**B.**Source equipment used in cable distance testing included: Sony Playstation 3 (120 GB model), 37" Philips 8-bit LCD TV and 40" Samsung 12-bit LCD TV.
**C.**Figures provided in this manual are for reference only, actual performance may vary according to which source and display are used as well as the type of cable used.

CONVERTERS.TV

## Specifications

| | |
|---|---|
| **Bandwidth Frequency** | 2.25 Gbps (single link) |
| **Input Ports** | 1 × HDMI female port , 1 × CAT6 input |
| **Output Ports** | 1 × CAT6 output |
| **EDID** | TV |
| **HDMI Cable In** | 1080p 8-bit (15 m), 12-bit (15 m) |
| **CAT6 Cable In/Out** | 1080p 8-bit (7~45 m), 12-bit (7~15 m) |
| **HDMI Resolution** | 480i~1080p50/60, 1080p24, VGA~WUXGA |
| **ESD Protection** | Human body model:<br>±8 kV (air-gap discharge)<br>±4 kV (contact discharge) |
| **Power Supply** | 5 V DC/1 A linear power adaptor<br>(US/EU standards,CE/FCC/UL certified)<br>or 5 V/1.2 A switching power adaptor<br>(with universal plug, CE/FCC/UL certified) |
| **Dimensions** | 78.5 mm (W) × 102 mm (D) × 30 mm (H) |
| **Weight** | 182 g |
| **Chassis Material** | Metal |
| **Silkscreen Colour** | Silver |
| **Power Consumption** | 4.1 W |
| **Operating Temperature** | 0 ˚C~40 ˚C/32 ˚F~104 ˚F |
| **Storage Temperature** | −20 ˚C~60 ˚C/−4 ˚F~140 ˚F |
| **Relative Humidity** | 20~90 % RH (non-condensing) |

CONVERTERS.TV

## Connection

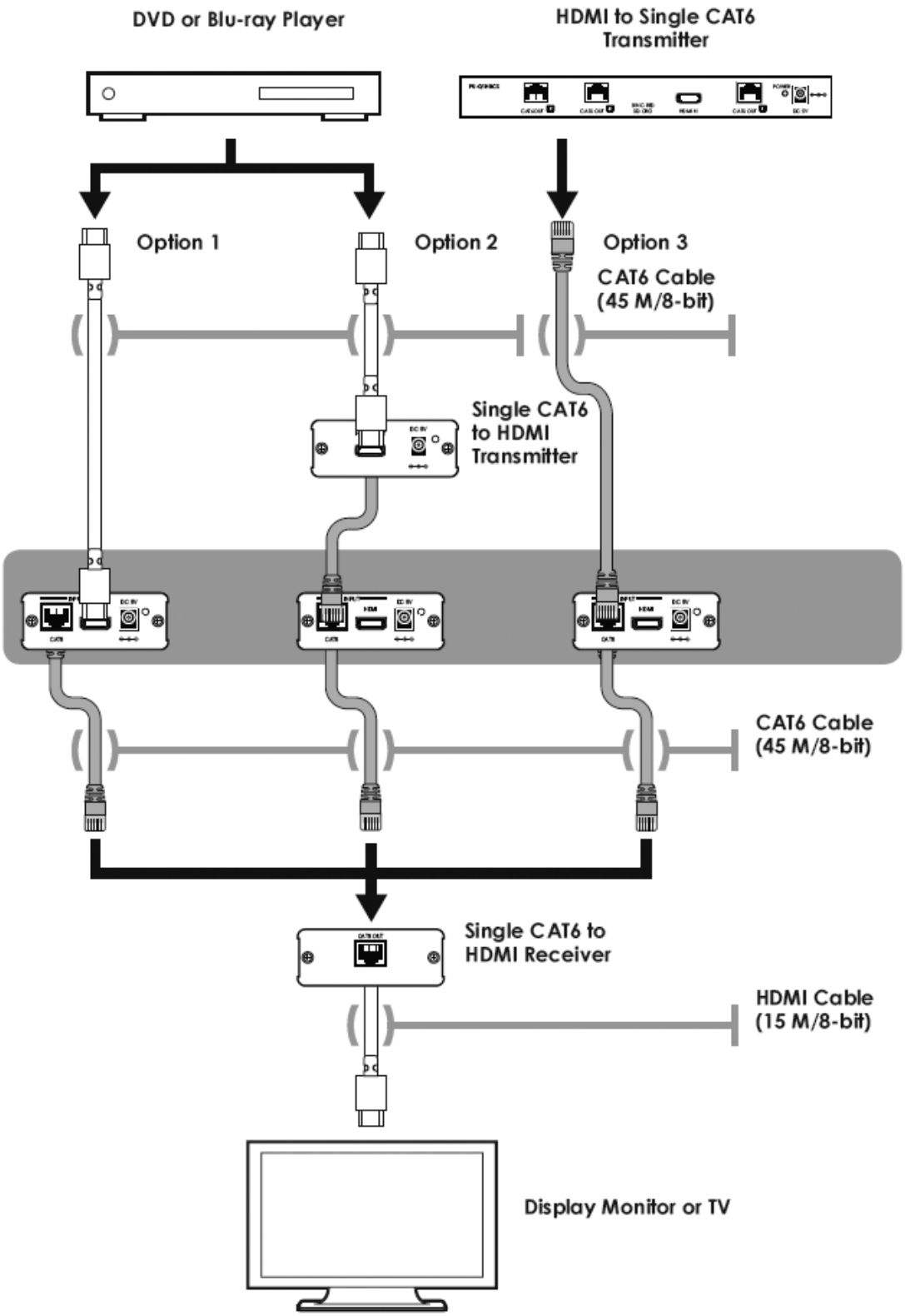
DVD or Blu-ray Player
HDMI to Single CAT6 Transmitter
Option 1
Option 2
Option 3
CAT6 Cable (45 M/8-bit)
Single CAT6 to HDMI Transmitter
CAT6 Cable (45 M/8-bit)
Single CAT6 to HDMI Receiver
HDMI Cable (15 M/8-bit)
Display Monitor or TV