Component to Component Matrix
4 in : 2 out ID# 510

Operation Manual

CONVERTERS.TV

Introduction

Component to Component Matrix - 4 in : 2 out is a high performance Component + L/R Audio Matrix with remote control. It offers you maximum convenience in HDTV audio/video signal distribution when you have multiple sources and displays to connect together. Each of the four HDTV audio/video sources can be directed to any one of the two outputs, so two displays can show 2 identical or 2 different sources at the same time. Component to Component Matrix - 4 in : 2 out provides a maximum of 8 possible connection scenarios between sources and displays.

Features

1. Provides 4 by 2 matrix input/output of Component (YPbPr/YCbCr) video and L/R audio signal.
2. Buffered video and audio output.
3. Input source LED indicators on each output select.
4. Ideal for home theater integration, conference room and retail stores.
5. Supports high resolution input/output: HDTV: 480i, 576i, 480p, 576p, 1080i, and 1080p
6. Supports analog stereo L/R audio input and output.
7. IR remote control.
8. RS-232 control.

Operating Functions and Controls Front Panel

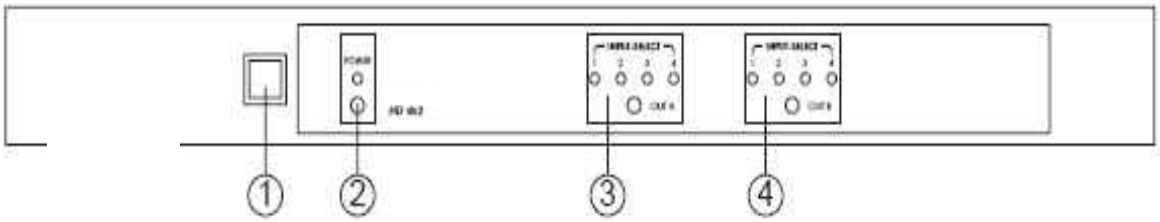

1. **Remote control sensor.**
2. **Power Switch & LED Indicator:**
   The LED will illuminate when the power is turned on.
3. **Input Select/Indicators for Output A:**
   Press the "OUT A" button repeatedly to switch to your desired source. One of the four LEDs will illuminate to indicate which input source is being selected, and routed to the display.
4. **Input Select/Indicators for Output B:**
   Press the "OUT B" button repeatedly to switch to your desired source. One of the four LEDs will illuminate to indicate which input source is being selected, and routed to the display.

CONVERTERS.TV

Rear Panel

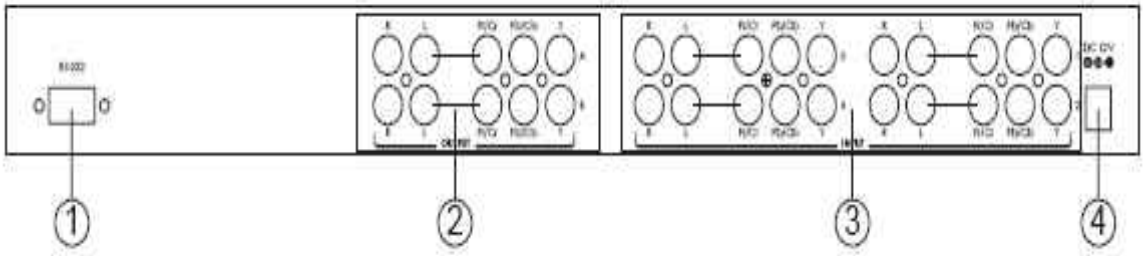

1.RS-232 Communication Port:

Connect to the COM port of your PC for the distant control over RS-232 channel.

2. Component and L/R Audio OUTPUT Ports A and B:

Connect each set of Component (3 RCA) and Audio (2 RCA) to the input of your HDTV displays.

3. Component and L/R Audio INPUT Ports 1, 2, 3 and 4:

Connect each set of Component (3 RCA) and Audio (2 RCA) to the output of your source equipments such as DVD player or set-top-box.

4. Power:

Plug the 12VDC power supply into the unit and connect the adapter to AC wall outlet.

Remote Control

1. **Power:** Press the button to turn on/off the unit.
2. **Input Select for Component/Audio OUT A:** Press 1, 2, 3 or 4 to select the desired input source for Component/Audio OUT A.
3. **Input Select for Component/Audio OUT B:** Press 1, 2, 3 or 4 to select the desired input source for Component/Audio OUT B.
4. **Void buttons** (No function.)

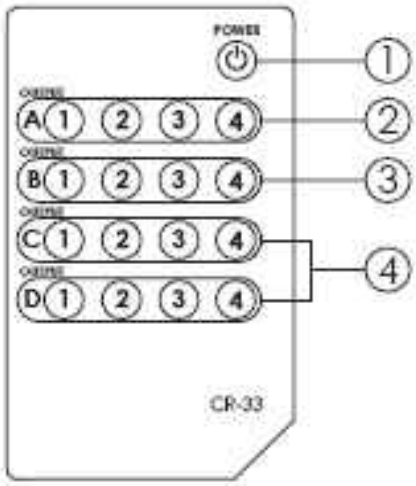

RS-232 Protocol

Pin Definition

ID #510			Remote Control Console	
PIN	Definition		PIN	Definition
1	NC		1	NC
2	Tx		2	Rx
3	Rx	→	3	Tx
4	NC		4	NC
5	GND	←	5	GND
6	NC		6	NC
7	NC		7	NC
8	NC		8	NC
9	NC		9	NC

*RS-232 transmission format:
Baud Rate: 9600 bps
Data bit: 8 Bits
Parity: None
Stop Bit: 1 bit

Commands

COMMAND	ACTION
P0	Power Off (standby)
P1	Power On *
ST	System Status *
VR	Firmware Version
A1	Output A select Input1
A2	Output A select Input2
A3	Output A select Input3
A4	Output A select Input4
B1	Output B select Input1
B2	Output B select Input2
B3	Output B select Input3
B4	Output B select Input4

*: command "P1" and "ST" response: P? A? B?

CONVERTERS.TV

Specifications

- **Input Ports:** Component (YPbPr/YCbCr) + L/R Audio x 4 sets
- **Output Ports:** Component (YPbPr/YCbCr) + L/R Audio x 2 sets
- **Power:** 12V DC power supply
- **Dimensions:** 436 (W) x 120 (D) x 44 (H)mm
- **Weight:** 1.6 Kgs

Support Resolution

INPUT	480i / 480p / 576i / 576p / 720p / 1080i / 1080p / @50Hz/60Hz
OUTPUT	480i / 480p / 576i / 576p / 720p / 1080i / 1080p / @50Hz/60Hz

Connection and Installation

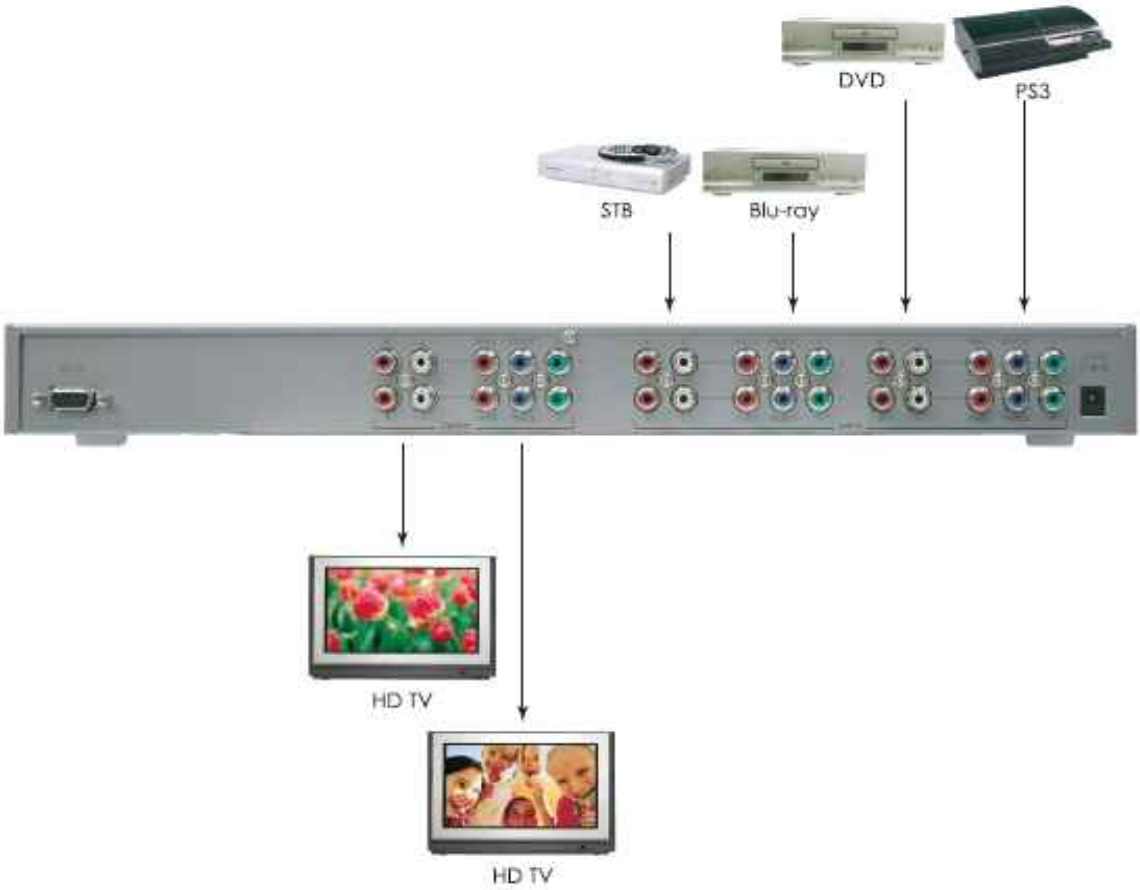

CONVERTERS.TV