HDMI Video Receiver over Cat5 Cable - 150m ID# 540

Operation Manual

CONVERTERS.TV

Introduction

HDMI Video Receiver over Cat5 Cable - 150m is the receiver (Rx) unit of HDMI over CAT5 Tx/Rx solution, works with ID #542: HDMI Video Transmitter over Cat5 Cable - 50m to 250m (the transmitter), can extend HDMI signal through CAT-5 cables for a distance up to 150 meters. The installation of HDMI Over CAT5 is easy and quick, simply place ID #542: HDMI Video Transmitter over Cat5 Cable - 50m to 250m next to your HDTV source such as a DVD player, then place HDMI Video Receiver over Cat5 Cable - 150m next to your display, and get all necessary cables connected to complete and enjoy.

Features

1. Compliant with HDMI 1.2, HDCP 1.1 and DVI 1.0 specifications.
2. Supports CAT-5/CAT-5E/CAT-6 cables of variable types.
3. Supports high definition input up to 1080P, output resolution follows input.
4. Easy to install and simple to operate.

Operating Functions and Controls

Front Panel

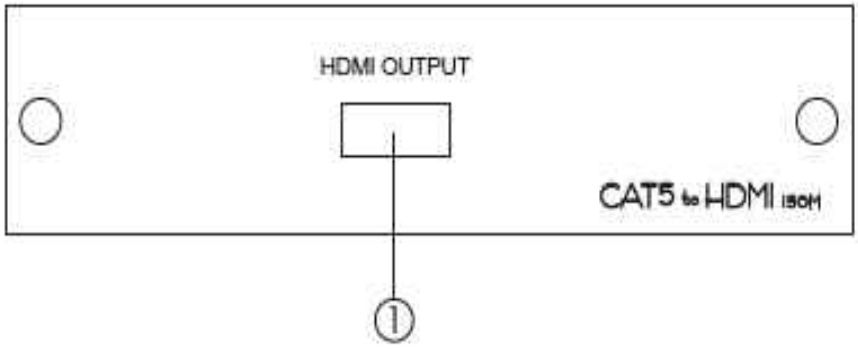

1. **HDMI OUTPUT:**
   Connect the HDMI output port to the HDMI input of your display.

Rear Panel

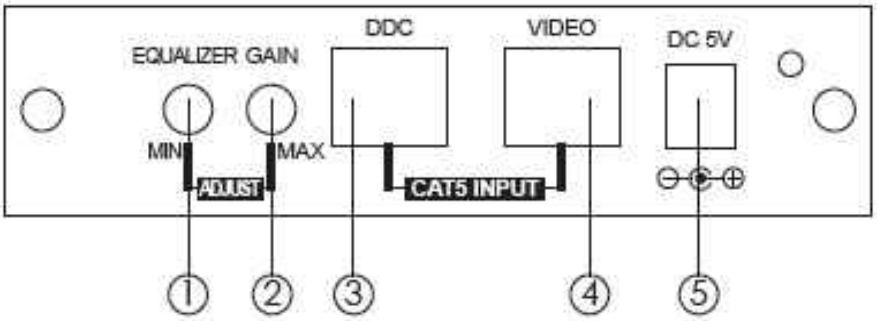

CONVERTERS.TV

1. **DDC INPUT:**

1. EQUALIZER:
Use this switch to adjust signal enhancement over long distance.
2. GAIN:
Use this switch to adjust brightness.
3. DDC INPUT:
Connect the DDC input to the DDC output of the transmitter unit using CAT-5/CAT-5E/CAT-6 cable.
Note: For advanced user only, if it's known that the DDC or HDCP data are not required for the source and the display, you can use a single CAT-5 cable for the VIDEO connection only.
4. VIDEO INPUT:
Connect the VIDEO input to the VIDEO output of the transmitter unit using CAT-5/CAT-5E/CAT-6 cable.
5. Power:
Plug the 5VDC power supply into the unit and connect the adaptor to AC wall outlet.

Specifications

1. Supported resolutions:	HDMI - 480i/480p, 576i/576p, 720P@50/60Hz, 1080i@50/60Hz, 1080p@50/60Hz
2. Input:	1 CAT-5 input for VIDEO, 1 CAT-5 input for DDC
3. Output:	1 HDMI female port
4. Power:	5V DC power supply
5. Dimensions:	123(W) x 125(D) x 30(H)mm
6. Weight:	700g

CONVERTERS.TV

Connection and Installation

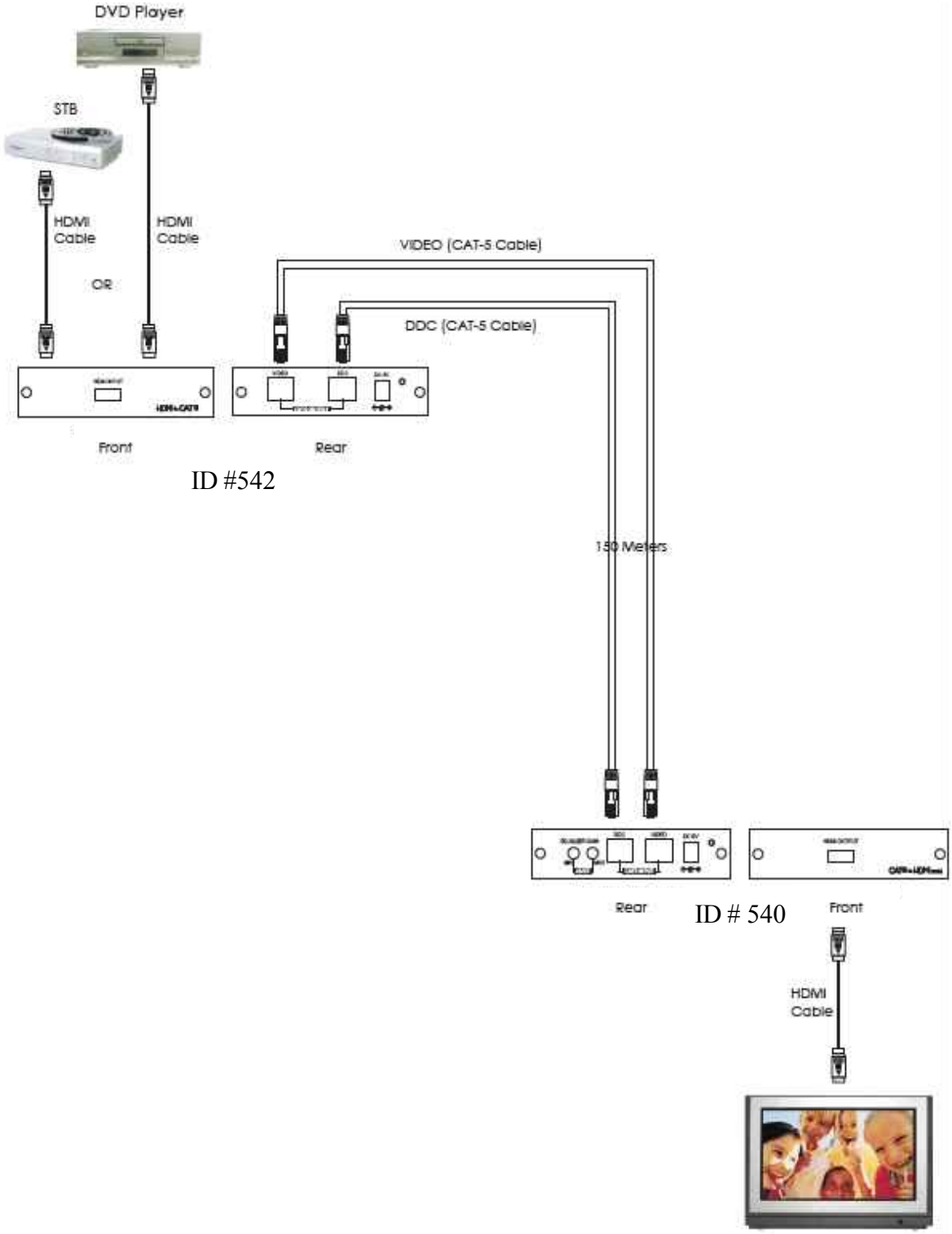

CONVERTERS.TV